SH 0025T

Monitor Desk Mount

For Most 13"-32" Monitors

Height-adjustable ergonomics for healthier posture and greater viewing comfort

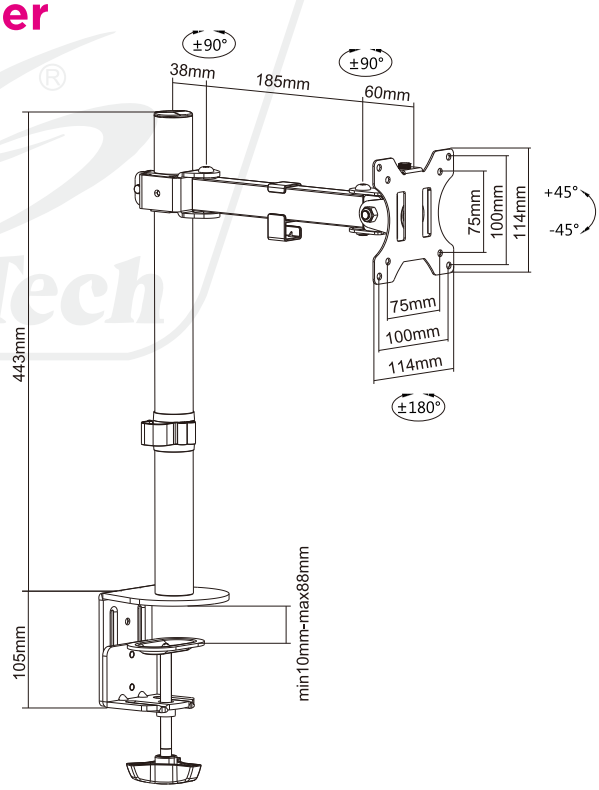

Screen Size	Weight Capacity	VESA Compatible	Tilt Range	Swivel Range	Screen Rotation	Cable Management
13"-32"	8kg/17.6lbs	75x75 100x100	+45°~-45°	+90°~-90°	360°	